POSITAL

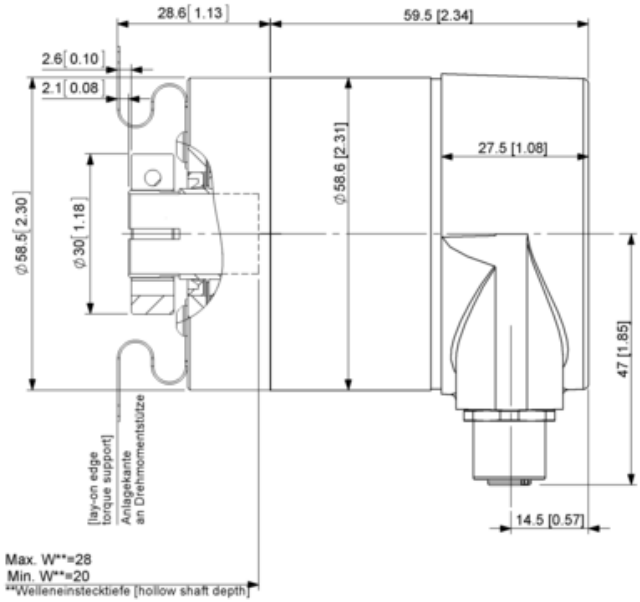
28.6 [1.13]
59.5 [2.34]
2.6 [0.10]
2.1 [0.08]
Ø58.6 [2.31]
27.5 [1.08]
Ø58.5 [2.30]
Ø30 [1.18]
47 [1.85]
[lay-on edge torque support]
Anlagekante an Drehmomentstütze
14.5 [0.57]
Max. W**=28
Min. W**=20
**Welleneinstecktiefe [hollow shaft depth]

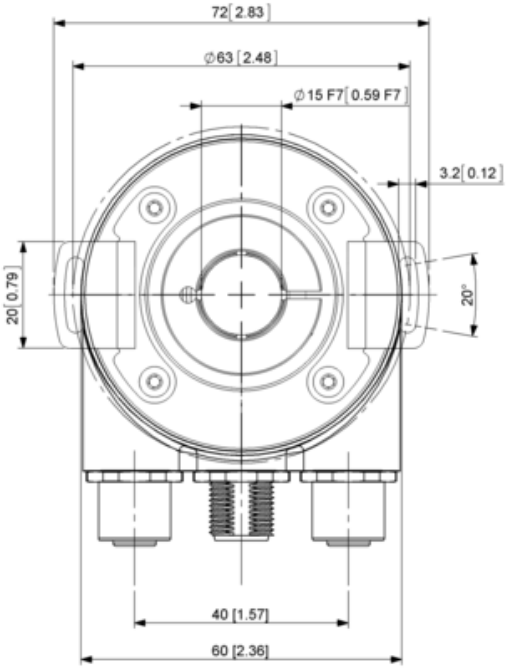
72 [2.83]
Ø63 [2.48]
Ø15 F7 [0.59 F7]
3.2 [0.12]
20 [0.79]
20°
40 [1.57]
60 [2.36]