POSITAL

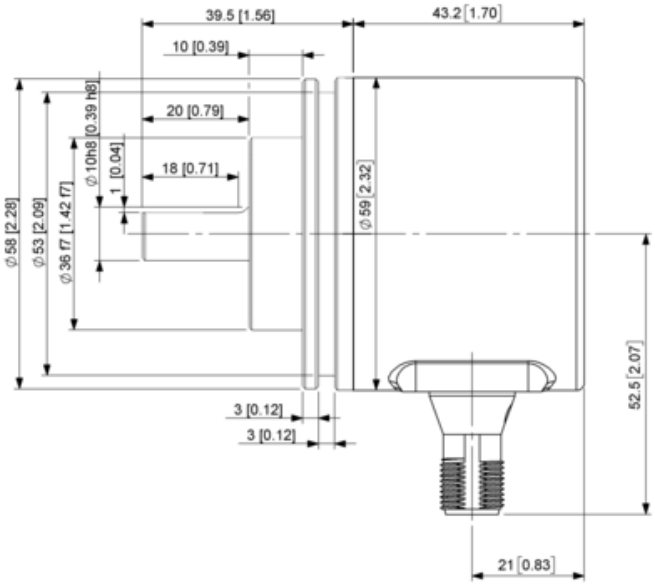
39.5 [1.56]
43.2 [1.70]
10 [0.39]
20 [0.79]
18 [0.71]
1 [0.04]
∅10h8 [0.39 h8]
∅36 f7 [1.42 f7]
∅53 [2.09]
∅58 [2.28]
∅59 [2.32]
52.5 [2.07]
3 [0.12]
3 [0.12]
21 [0.83]

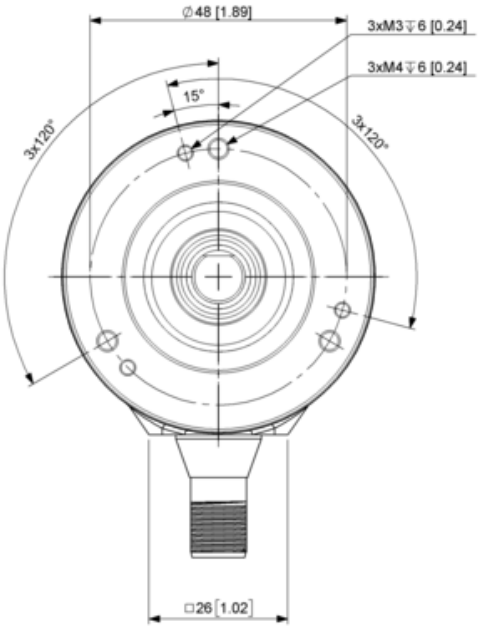
∅48 [1.89]
3xM3 ↧6 [0.24]
3xM4 ↧6 [0.24]
15°
3x120°
3x120°
□26 [1.02]