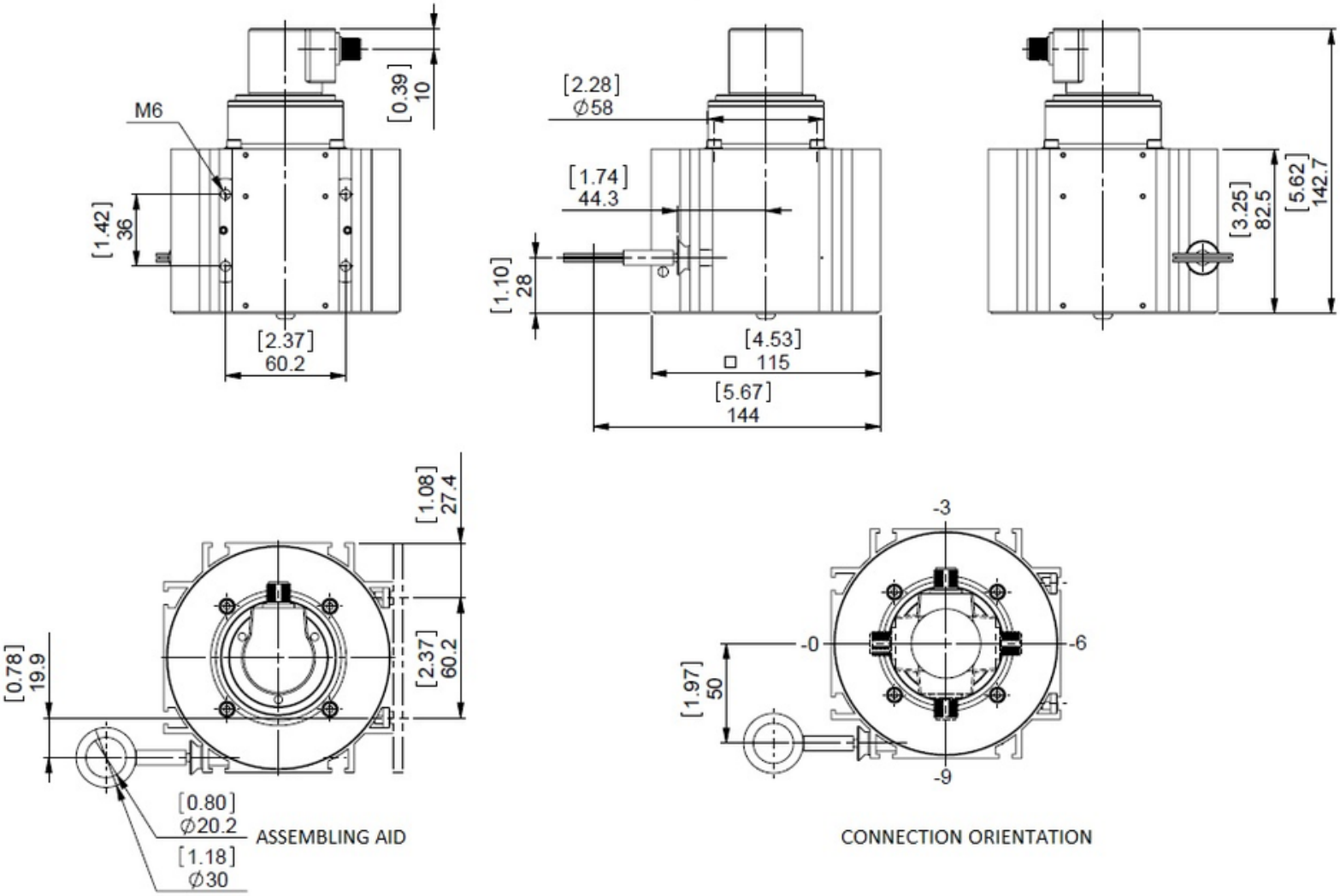
M6
[0.39]
10
[1.42]
36
[2.37]
60.2
[2.28]
⌀58
[1.74]
44.3
[1.10]
28
[4.53]
□ 115
[5.67]
144
[3.25]
82.5
[5.62]
142.7
[1.08]
27.4
[2.37]
60.2
[0.78]
19.9
[0.80]
⌀20.2
[1.18]
⌀30
ASSEMBLING AID
-3
-0
-6
-9
[1.97]
50
CONNECTION ORIENTATION