POSITAL

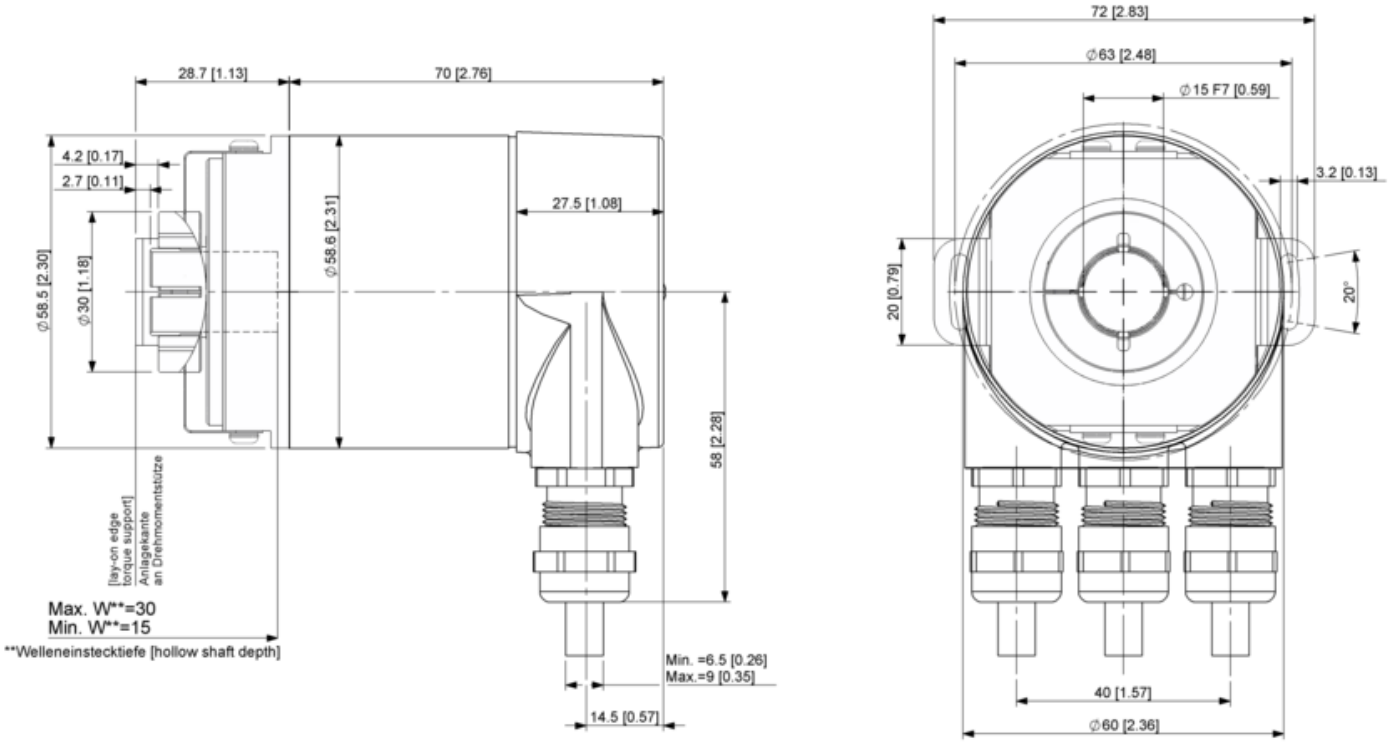
28.7 [1.13]
70 [2.76]
4.2 [0.17]
2.7 [0.11]
27.5 [1.08]
∅58.6 [2.31]
∅58.5 [2.30]
∅30 [1.18]
58 [2.28]
[lay-on edge torque support]
Anlagekante an Drehmomentstütze
Max. W**=30
Min. W**=15
**Welleneinstecktiefe [hollow shaft depth]
Min. =6.5 [0.26]
Max.=9 [0.35]
14.5 [0.57]
72 [2.83]
∅63 [2.48]
∅15 F7 [0.59]
3.2 [0.13]
20 [0.79]
20°
40 [1.57]
∅60 [2.36]