POSITAL

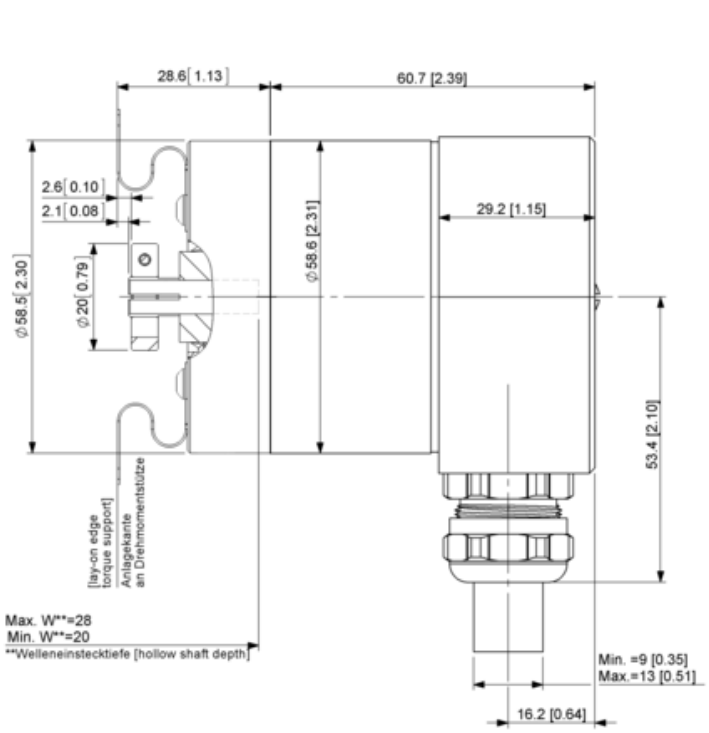
28.6 [1.13]
60.7 [2.39]
2.6 [0.10]
2.1 [0.08]
∅58.5 [2.30]
∅20 [0.79]
∅58.6 [2.31]
29.2 [1.15]
53.4 [2.10]
[lay-on edge torque support]
Anlagekante an Drehmomentstütze
Max. W**=28
Min. W**=20
**Welleneinstecktiefe [hollow shaft depth]
Min. =9 [0.35]
Max.=13 [0.51]
16.2 [0.64]

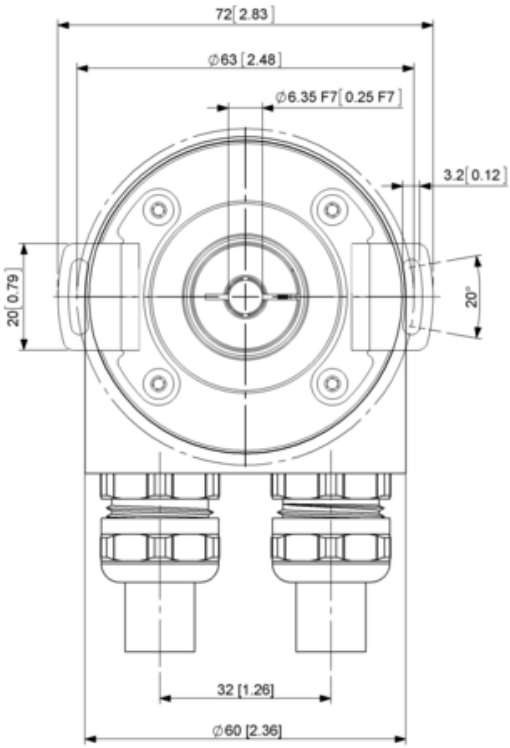
72 [2.83]
∅63 [2.48]
∅6.35 F7 [0.25 F7]
3.2 [0.12]
20 [0.79]
20°
32 [1.26]
∅60 [2.36]