POSITAL

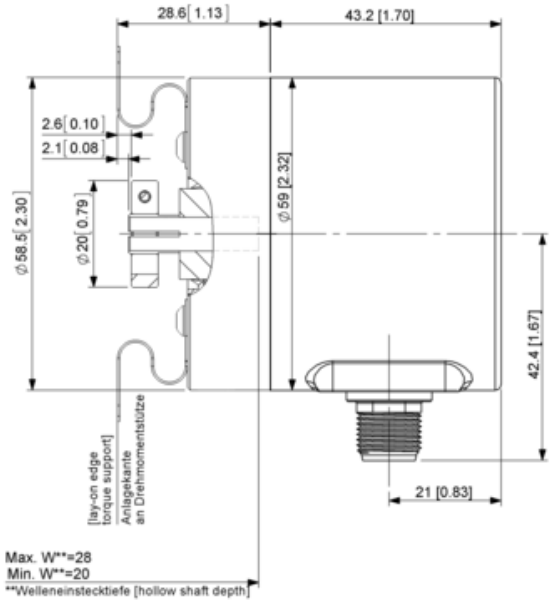
28.6 [1.13]
43.2 [1.70]
2.6 [0.10]
2.1 [0.08]
∅58.5 [2.30]
∅20 [0.79]
∅59 [2.32]
42.4 [1.67]
21 [0.83]
[lay-on edge torque support]
Anlagekante an Drehmomentstütze
Max. W**=28
Min. W**=20
**Welleneinstecktiefe [hollow shaft depth]

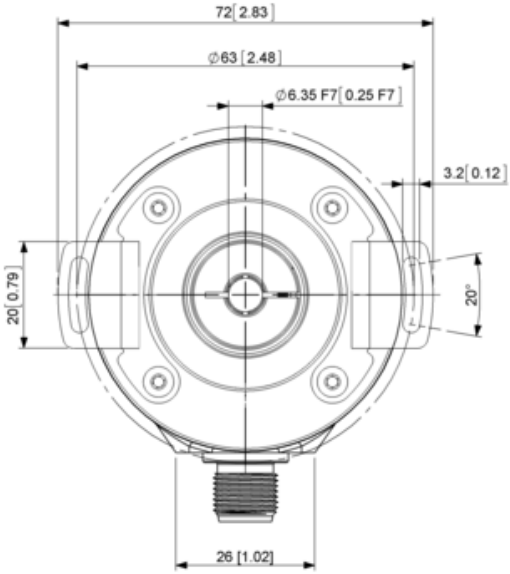
72 [2.83]
∅63 [2.48]
∅6.35 F7 [0.25 F7]
3.2 [0.12]
20 [0.79]
20°
26 [1.02]