POSITAL

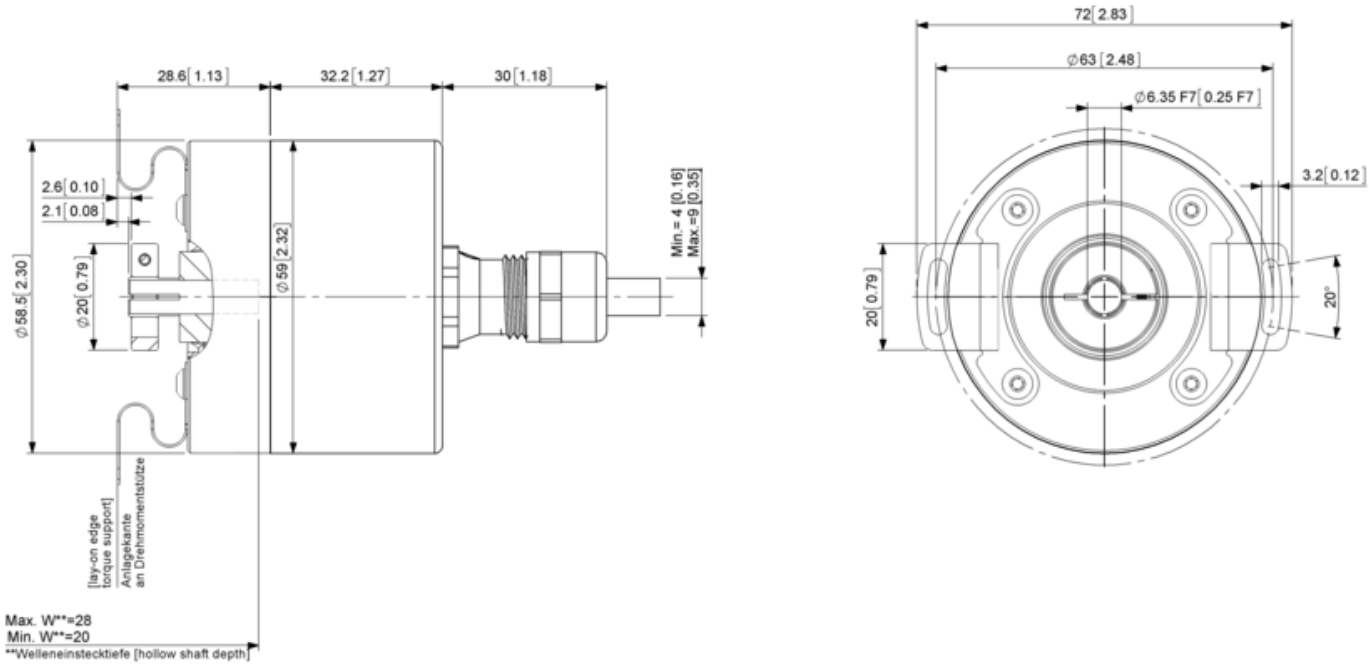
28.6 [1.13]
32.2 [1.27]
30 [1.18]
2.6 [0.10]
2.1 [0.08]
∅58.5 [2.30]
∅20 [0.79]
∅59 [2.32]
Min.=4 [0.16]
Max.=9 [0.35]
[lay-on edge torque support]
Anlagekante an Drehmomentstütze
Max. W**=28
Min. W**=20
**Welleneinstecktiefe [hollow shaft depth]
72 [2.83]
∅63 [2.48]
∅6.35 F7 [0.25 F7]
3.2 [0.12]
20 [0.79]
20°