POSITAL

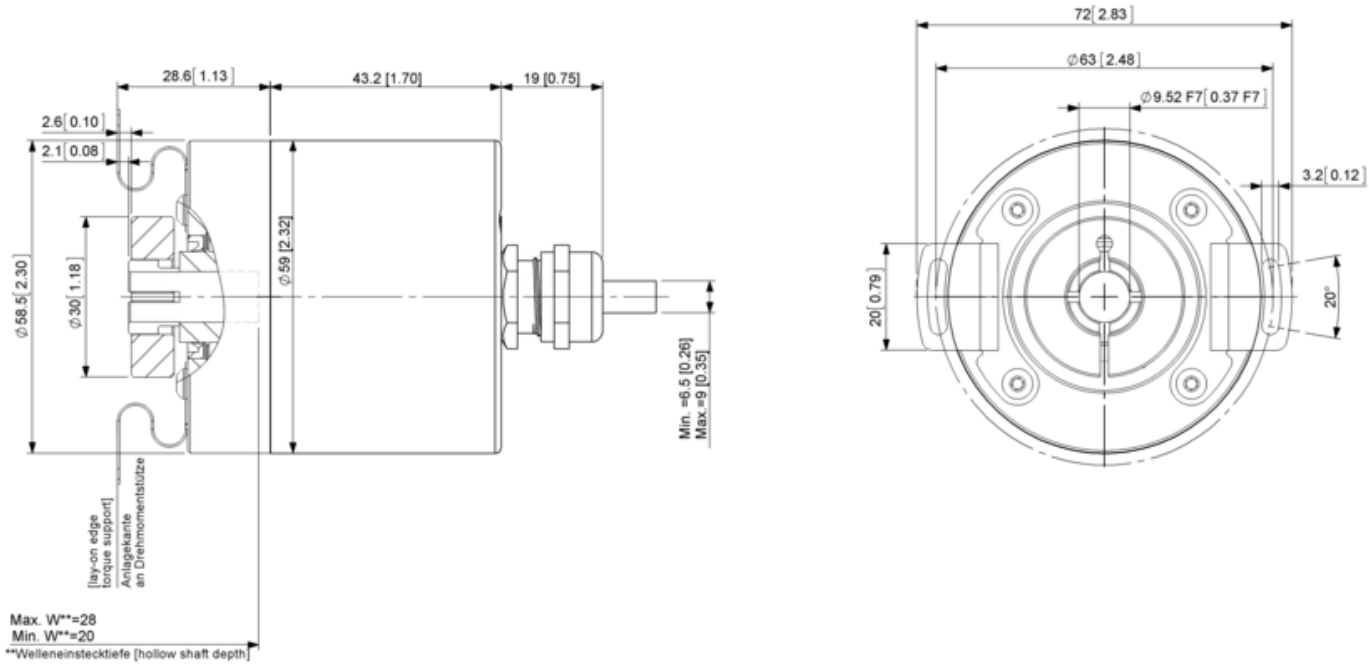
28.6 [1.13]
43.2 [1.70]
19 [0.75]
2.6 [0.10]
2.1 [0.08]
Ø58.5 [2.30]
Ø30 [1.18]
Ø59 [2.32]
Min. =6.5 [0.26]
Max. =9 [0.35]
[lay-on edge torque support]
Anlagekante an Drehmomentstütze
Max. W**=28
Min. W**=20
**Welleneinstecktiefe [hollow shaft depth]
72 [2.83]
Ø63 [2.48]
Ø9.52 F7 [0.37 F7]
3.2 [0.12]
20 [0.79]
20°