POSITAL

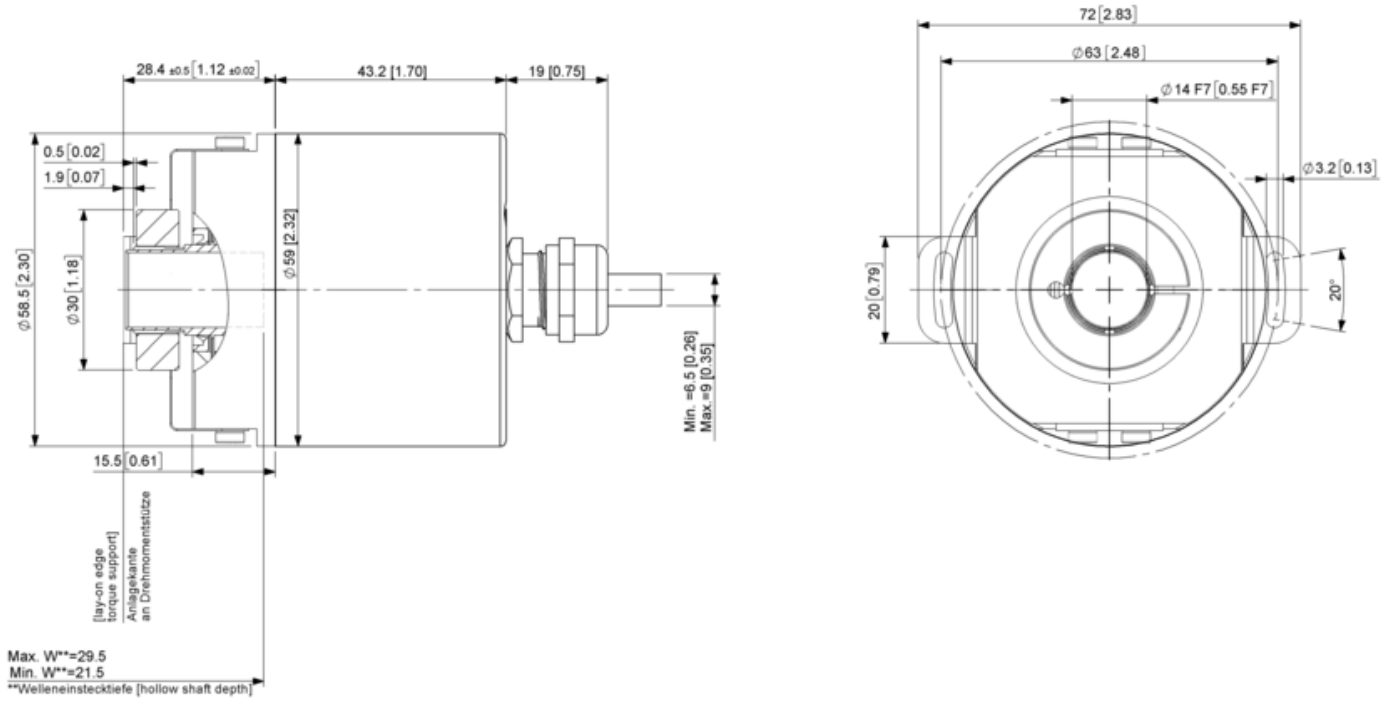
28.4 ±0.5 [1.12 ±0.02]
43.2 [1.70]
19 [0.75]
0.5 [0.02]
1.9 [0.07]
Ø58.5 [2.30]
Ø30 [1.18]
Ø59 [2.32]
Min. =6.5 [0.26]
Max. =9 [0.35]
15.5 [0.61]
(lay-on edge
torque support]
Anlagekante
an Drehmomentstütze
Max. W**=29.5
Min. W**=21.5
**Welleneinstecktiefe [hollow shaft depth]
72 [2.83]
Ø63 [2.48]
Ø14 F7 [0.55 F7]
Ø3.2 [0.13]
20 [0.79]
20°