POSITAL

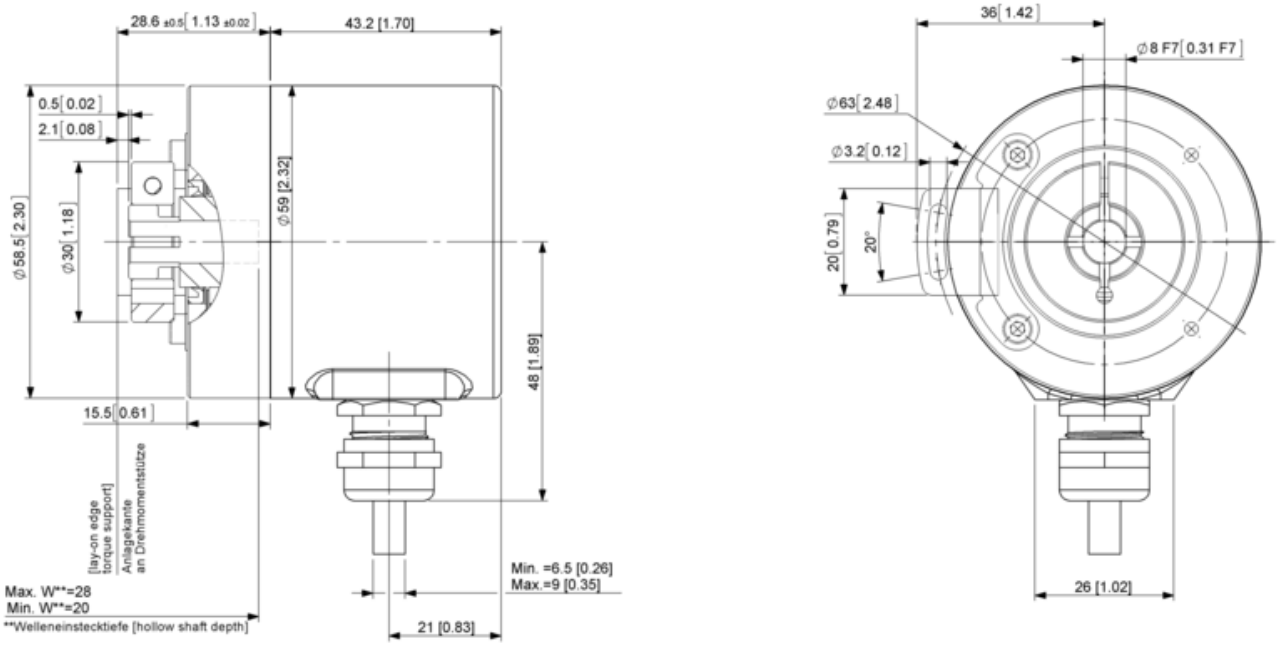
28.6 ±0.5 [1.13 ±0.02]
43.2 [1.70]
0.5 [0.02]
2.1 [0.08]
Ø58.5 [2.30]
Ø30 [1.18]
Ø59 [2.32]
48 [1.89]
15.5 [0.61]
[lay-on edge torque support]
Anlagekante an Drehmomentstütze
Max. W**=28
Min. W**=20
**Welleneinstecktiefe [hollow shaft depth]
Min. =6.5 [0.26]
Max.=9 [0.35]
21 [0.83]
36 [1.42]
Ø8 F7 [0.31 F7]
Ø63 [2.48]
Ø3.2 [0.12]
20 [0.79]
20°
26 [1.02]