POSITAL

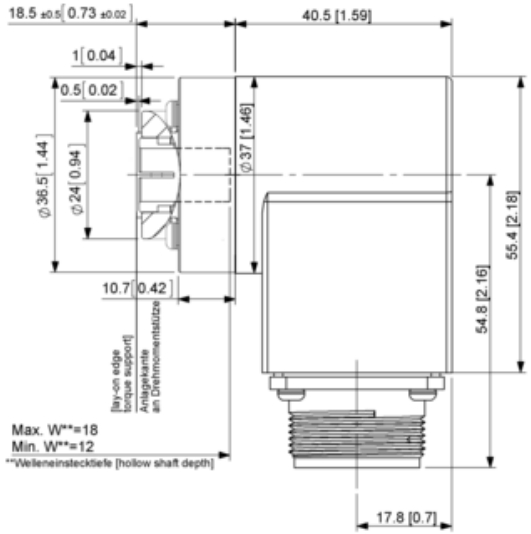
18.5 ±0.5 [0.73 ±0.02]
40.5 [1.59]
1 [0.04]
0.5 [0.02]
∅36.5 [1.44]
∅24 [0.94]
∅37 [1.46]
55.4 [2.18]
54.8 [2.16]
10.7 [0.42]
[lay-on edge
tongue support]
Anlagekante
an Drehmomentstütze
Max. W**=18
Min. W**=12
**Welleneinstecktiefe [hollow shaft depth]
17.8 [0.7]

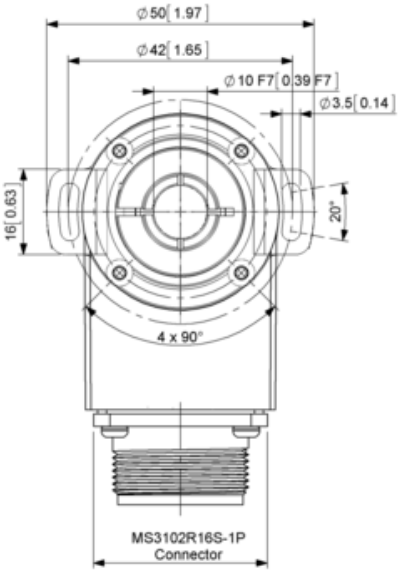
∅50 [1.97]
∅42 [1.65]
∅10 F7 [0.39 F7]
∅3.5 [0.14]
16 [0.63]
20°
4 x 90°
MS3102R16S-1P
Connector