POSITAL

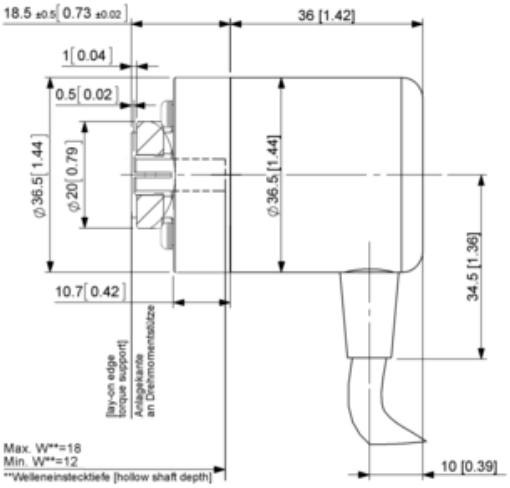
18.5 ±0.5 [0.73 ±0.02]
36 [1.42]
1 [0.04]
0.5 [0.02]
⌀36.5 [1.44]
⌀20 [0.79]
⌀36.5 [1.44]
34.5 [1.36]
10.7 [0.42]
[lay-on edge
torque support]
Anlagekante
an Drehmomentstütze
Max. W**=18
Min. W**=12
**Welleneinstecktiefe [hollow shaft depth]
10 [0.39]

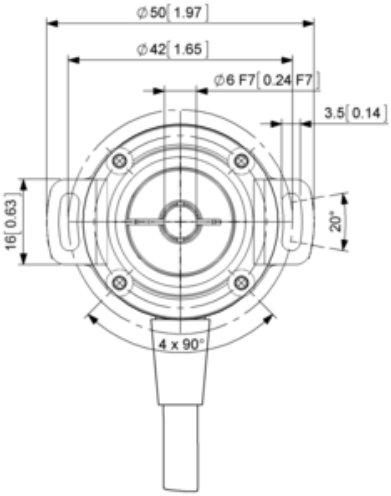
⌀50 [1.97]
⌀42 [1.65]
⌀6 F7 [0.24 F7]
3.5 [0.14]
16 [0.63]
20°
4 x 90°